Hermann®
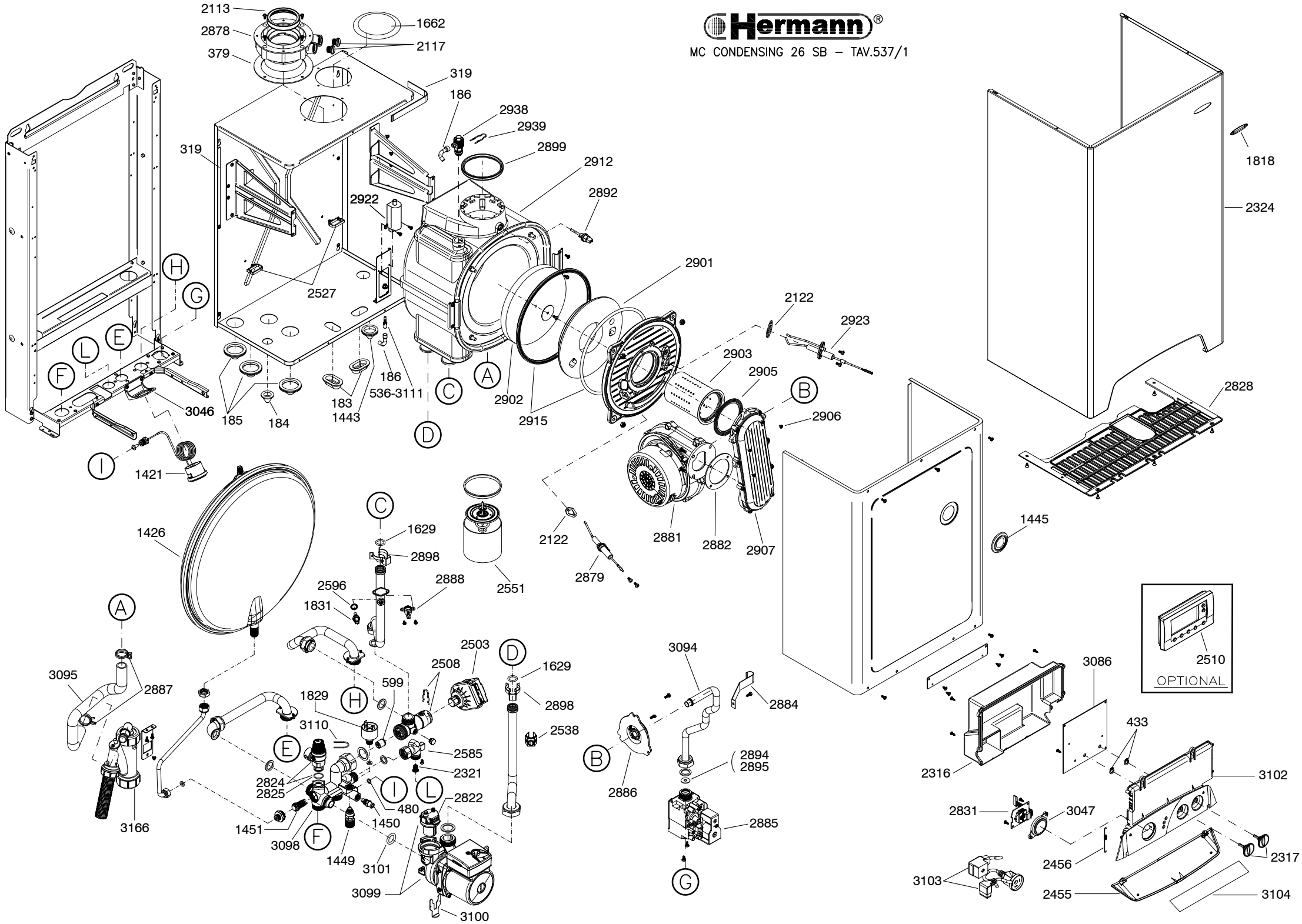
MC CONDENSING 26 SB – TAV.537/1